STANDARD TEST METHOD AND PERFORMANCE SPECIFICATION USED IN EVALUATING THE PERFORMANCE CHARACTERISTICS OF ~~CHEST~~ PROTECTORS FOR COMMOTIO CORDIS

NOCSAE DOC (ND) 200-~~18~~19

Prepared By

NOCSAE

NATIONAL OPERATING COMMITTEE
ON STANDARDS FOR ATHLETIC EQUIPMENT

~~Revised: February 2018~~
Proposed: July 2019

PROPOSED

TABLE OF CONTENTS

SCOPE 1
REFERENCED DOCUMENTS 1
SIGNIFICANCE AND USE 1
TERMINOLOGY 1
TEST SAMPLES 2
CONDITIONING ENVIRONMENTS 2
SAMPLE PREPARATION 2
CERTIFICATION 2
SUMMARY OF TEST METHOD 2
TEST INSTRUMENTS AND EQUIPMENT 2
SYSTEM CHECK 3
IMPACT LOCATIONS 3
IMPACT ATTENUATION TESTS 3
TEST REQUIREMENTS 4
LABELS AND WARNINGS 4
APPENDIX 1 9

FEBRUARY 2017 MODIFICATIONS/REVISIONS 10
JUNE 2017 MODIFICATIONS/REVISIONS 10
FEBRUARY 2018 MODIFICATIONS/REVISIONS 10
JULY 2019 MODIFICATIONS/REVISIONS 10

PROPOSED

1. Scope

1.1 This standard test method describes laboratory equipment and basic requirements pertinent to projectile testing of ~~chest~~ protectors using the NOCSAE Thoracic Surrogate. It is believed that compliance with this test method will lead to improved ~~chest~~ protector performance, thus a reduced risk of commotio cordis. The ~~chest~~ protector shall be supplied as offered for sale with required hardware and fitting instructions along with required accessories if any are required for the protector to function as designed. The requirements of this standard shall be subject to Equipment Level 2 compliance criteria, unless otherwise stated herein.

1.2 *This standard does not purport to address all of the safety problems, if any, associated with its use. It is the responsibility of the user of this standard to establish appropriate safety and health practices plus determine the applicability of regulatory limitations prior to use.*

2. Referenced Documents

2.1. NOCSAE DOC (ND) 001: *Standard Test Method and Equipment Used in Evaluating the Performance Characteristics of Headgear/Equipment*

2.2. NOCSAE DOC (ND) 021: *Standard Projectile Impact Test Method and Equipment Used in Evaluating the Performance Characteristics of Protective Headgear/Projectiles*

3. Significance and Use

3.1. The purpose of this test method is to provide reliable and repeatable measurements for the evaluation of various types of ~~chest~~ protectors. The pass/fail criteria are based on peak force (lbf, N) and within specified tolerances for other measures.

4. Terminology

4.1. NOCSAE Thoracic Surrogate (NTS): A device consisting of a damped loading surface, three load cells capable of measuring peak force, and a rigid back plate. The three load cells are positioned in between the loading surface and the back plate and represent the upper chest, lower chest, and cardiac silhouette.

4.2. Load Cell: A transducer that converts a mechanical force input to an electrical output signal.

4.3. Cardiac Load: The peak force measured by the load cell intended to represent the cardiac silhouette.

4.4. Distributed Load: The sum of the peak force measured by the upper ~~chest~~ and lower ~~chest~~ load cells.

4.5. Linear Bearing Table: A sliding table-top fitted with the necessary supports to position the thoracic surrogate at various positions in order to facilitate impacts at the designated locations. This table may be mounted to a separate device that allows for rapid elevation adjustments.

PROPOSED

4.6. Primary Protective Component: That component of the protector/system that is the primary energy attenuation device, without which the protector or system will not meet the impact requirements.

5. **Test Samples**

5.1. See Sections 6 and 11, NOCSAE DOC 001, for QC/QA protocol testing.

5.2. For any standalone test report, a minimum of two samples per model in the smallest size offered for sale must be submitted. Larger model/sizes must be proportionally identical to the submitted sample and may be requested if the submitted sample size does not adequately fit the surrogate.

6. **Conditioning Environments**

6.1. Ambient Temperature: Expose ~~chest~~ protector, projectile, and equipment to testing environment for a minimum of four hours.

7. **Sample Preparation**

7.1. See section 10 of NOCSAE DOC 001.

8. **Certification**

8.1. See section 6 of NOCSAE DOC 001 for certification requirements.

9. **Summary of Test Method**

9.1. A ~~chest~~ protector is positioned on the NOCSAE Thoracic Surrogate, which is rigidly mounted to a linear bearing table to allow post impact kinematics. The projectile is propelled at the surrogate such that the impact velocity is within 3% of the specified velocity. At impact, the peak force is measured by each of the three load cells.

10. **Test Instruments and Equipment**

10.1. Projectile launching device capable of propelling the specified projectile to the specified velocity within 3% and having a targeting device that allows impacts within a ¼ inch radius within 24 inches from the muzzle or the point at which the projectile is first in “free flight.”

10.2. Recommended Air Cannon Assembly Including Linear Bearing Table Assembly (See NOCSAE DOC 021, Figures 1 and 2).

10.3. NOCSAE Thoracic Surrogate comprising three 750 lbf maximum capacity single axis load cells.* Surrogate performance must be verified using the procedure outlined in Appendix 1.

* Note: NOCSAE compliant surrogate available from Southern Impact Research Center

PROPOSED

10.4. A linear bearing table that is capable of providing some post impact motion with a weight not to exceed 12.5 lb (5.7 kg).

10.5. Data sampling rate shall be a minimum of 10,000 Hz per channel.

10.6. Data shall be filtered with a CFC120 low pass filter.

10.7. Impact shall be recorded on a device capable of capturing the three individual load cell traces.

11. **System Check**

11.1. See section 18, NOCSAE DOC 001

11.2. Using a lacrosse ball or baseball that complies with the requirements of section 13, three impacts shall be performed on the unprotected NOCSAE Thoracic Surrogate at each of the three load cell locations. The impact velocity shall be 30 mph ± 3% and shall impact the center (± ¼ inch) of the cardiac silhouette, the lower load cell, and the upper load cell (Figure 1). The peak force measured by the load cell shall be no less than 130 lbf (578 N) and no more than 150 lbf (667 N) for each of the system check impacts. The projectile chosen shall be the same type of projectile designated by the manufacturer to be used during testing.

12. **Impact Locations**

12.1. Cardiac Silhouette: Projectile shall impact the surrogate in the center of the cardiac silhouette (± ¼ inch) as shown in Figure 1. The surrogate shall be positioned so the base of the surrogate is perpendicular (± 2.5 degrees) to the line of travel of the projectile.

12.2. Random Location Impacts may be directed at any point located on the padded impact area as shown in Figure 2. The initial point of contact for Random Impact #2 must be a minimum of 4 inches away from the initial point of contact for Random Impact #1. The surrogate shall be positioned so the base of the surrogate is perpendicular (± 2.5 degrees) to the line of travel of the projectile.

TABLE 1
Impact Locations
Velocity – mph (m/s) ± 3%

	Center of Cardiac Silhouette ± ¼ inch	Random Location #1	Random Location #2
Sample 1	30 (13.4)	30 (13.4)	30 (13.4)
Sample 2	50 (22.4)	50 (22.4)	50 (22.4)

13. **Impact Attenuation Tests**

13.1. The manufacturer shall designate the projectile, baseball or lacrosse ball, to be used during testing. Testing shall be conducted in accordance with TABLE 1.

13.1.1. Baseball: The baseball (s) used shall weigh 5 – 5.25 ounces (142 – 149

PROPOSED

grams), have a circumference of 9 – 9.25 inches, and have a C-D at .25 inches of 200 – 300 lbs. and be of the construction specified and used by Major League Baseball.

13.1.2. Lacrosse Ball: The lacrosse ball(s) used shall weigh 5.0 to 5.25 ounces (141.8–148.8 grams), have a circumference of 7.75–8.0 inches and have a C-D at 25% of 115-150 lbs.

13.2. The ~~chest~~ protector shall be fitted to the NTS according to the manufacturer's fitting instructions. The manufacturer may provide a ~~chest~~ protector positioning index if the protector is not available in a size designed to appropriately fit the surrogate.

13.3. The NTS will be positioned with its impact site located within 24 inches (610 mm) from the end of the muzzle (or from the point at which the ball is released).

13.4. ~~Chest~~ Protector repositioning during testing is anticipated.

14. **Test Requirements**

14.1. 30 mile per hour condition

14.1.1. For any impact, the peak force measured by the cardiac load cell shall not exceed 90 lbf (400N).

14.1.2. For any impact, the peak force measured by the upper ~~chest~~ load cell or lower ~~chest~~ load cell shall not exceed 112 lbf (498 N).

14.2. 50 mile per hour condition

14.2.1. For any impact, the peak force measured by the cardiac load cell shall not exceed 180 lbf (800N).

14.2.2. For any impact, the peak force measured by the upper ~~chest~~ load cell or lower ~~chest~~ load cell shall not exceed 225 lbf (1001 N).

15. **Labels and Warnings**

15.1. Each ~~chest~~ protector shall be permanently and legibly labeled or marked in a manner such that the following information can be easily read and must not be obscured in any manner.

15.1.1. Name of manufacturer or a logo or recognizable mark that is registered and/or trademarked to the manufacturer.

15.1.2. Model designation

15.1.3. Size

15.1.4. Month and year of manufacture

PROPOSED

15.1.5. Notice that indicates additional information is available to the wearer. Such additional information may be on the packaging, insert, or removable tag.

15.1.6. A permanent, exact replica of the appropriate sport specific seal must appear legibly on the exterior of the ~~chest protector.~~protector's primary protective component.

NOTE: You must have an executed, valid license agreement with NOCSAE to use any of the NOCSAE logos at any time. NOCSAE, the NOCSAE seals/logos, and the National Operating Committee on Standards for Athletic Equipment are registered marks and the exclusive property of the Committee. Use of the marks in any manner is prohibited without prior written permission of the NOCSAE Board of Directors.

15.2. Packaging and/or instructional literature for ~~chest~~ protectors shall be permanently and legibly marked in a manner such that the following information can be easily read.

15.2.1. Information that warns the user that the ~~chest~~ protector can be damaged by contact with common substances (for example, certain solvents, cleaners, etc.) and that this damage may or may not be visible to the user. This information should also list any recommended cleaning agents and/or procedures.

15.2.2. Information that warns the user that for maximum performance the manufacturers fitting instructions must be followed.

15.3. Each ~~chest~~ protector shall have permanently affixed to the exterior of the protector a clearly legible statement which can be easily read without removal of any tape or other temporary or permanent part, which contains language which effectively communicates to the purchaser and user the following information, using the same or similar language:

WARNING:

NO ~~THORACIC OR CHEST~~ PROTECTOR CAN PREVENT ALL CARDIAC OR OTHER INJURY. CATASTROPHIC INJURY AND DEATH MAY OCCUR TO THE WEARER DESPITE USING THIS PROTECTOR.

15.4. Additional information to be included with the protector shall describe proper fitting

PROPOSED

and use of the protector.

PROPOSED

This standard is subject to revision at any time by the responsible technical authority and must be reviewed every five years and if not revised either reapproved or withdrawn. Your comments are invited either for revision, modification or creation of additional standards and should be addressed to NOCSAE's Executive Director. Check the web at www.nocsae.org *to obtain the latest version of a standard.*

This standard is copyrighted by NOCSAE 11020 King St. Suite 215, Overland Park, Kansas 66210 USA. Copies may be obtained from the NOCSAE web site at www.nocsae.org

PROPOSED

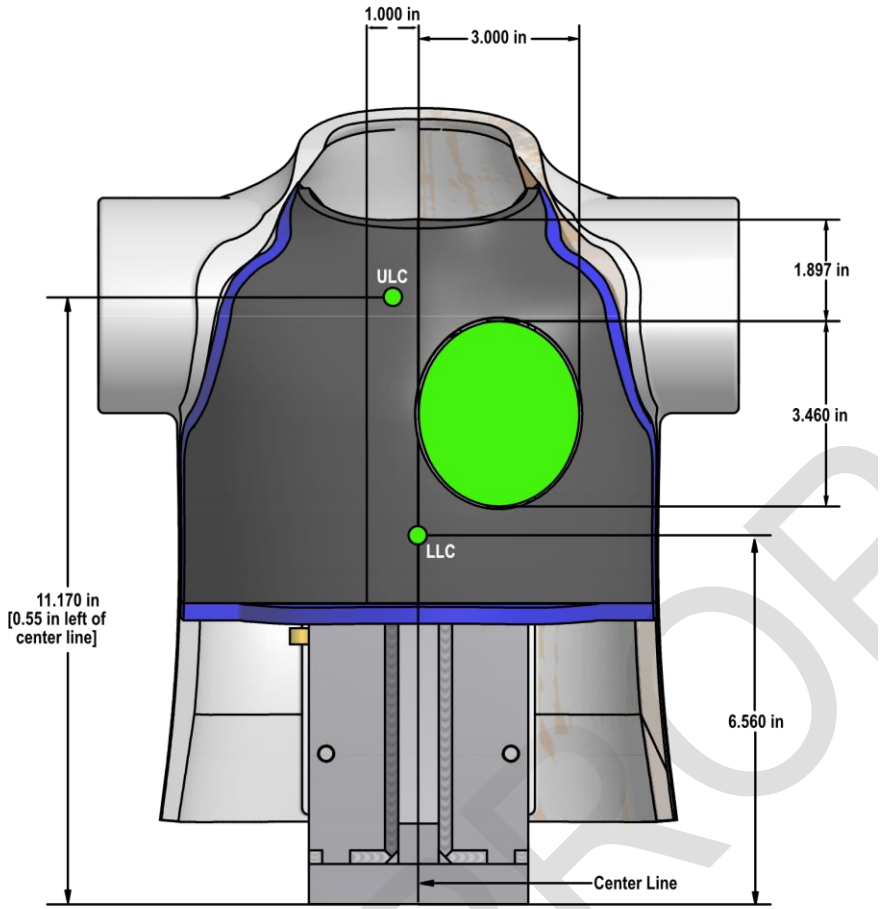

Figure 1 – Load Cell Locations

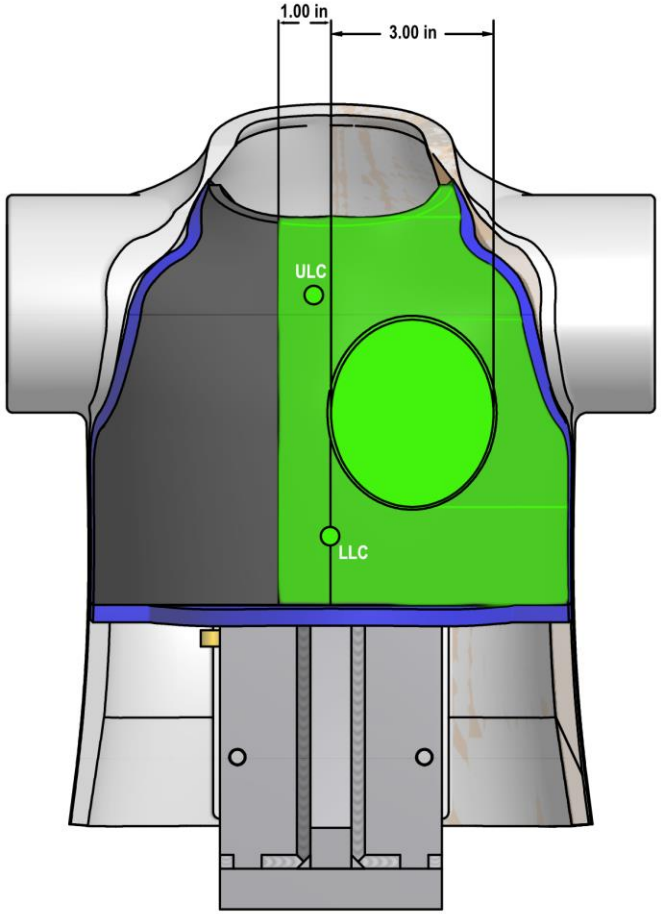

Figure 2: Legal Test Impact Area (in green)

PROOF

Appendix 1

Verification Procedure for NOCSAE Thoracic Surrogate [NTS]

This procedure is conducted to insure that the response of the NTS is correct when impacted with a projectile between the velocities of 29.1 to 30.9 MPH. Adjustments to the data acquisition system for each force transducer may be necessary. If the NTS response cannot be adjusted so that the response is correct, then service of the NTS is indicated prior to any product testing. Prior to commencing this procedure, carefully inspect all equipment to ensure your lab's mechanical system is in proper working order.

Validation Protocol:

Step 1: Setup the NTS and data acquisition system using the load cell output information given on the Interface Load Cell Calibration Certificate and according to NOSCAE DOC 200.

Step 2: Depending on the type of testing your lab will be doing, obtain a lacrosse ball or baseball with the specifications described in Section 13.1.1 [baseball] or 13.1.2. [lacrosse].

Step 3: The target response of the unprotected surrogate at 30 mph ± 0.2 is 140 lbf ± 2. Impact the NTS at the center of the cardiac silhouette at 30 mph ± 0.2. If the projectile impact results in a response of 140 lbf ± 2, no adjustments are needed at this time - proceed to Step 5.

Step 4: If the projectile impact at 30 mph ± 0.2 mph does not give a response of 140 lbf ± 2, adjust the system settings and repeat the impact. Repeat this step until the impact response is 140 lbf ± 2.

Step 5: Impact the NTS at the center of the cardiac silhouette at 29.1 mph ± 0.2. The response at this velocity must be greater than 130 lbf. If the response of your system is below 130 lbf, repeat Step 4 and target the higher end of 140 lbf ± 2.

Step 6: Impact the NTS at the center of the cardiac silhouette at 30.9 mph ± 0.2. The response at this velocity must be less than 150 lbf. If the response of your system is above 150 lbf, repeat Step 4 and target the lower end of 140 lbf ± 2.

Step 7: Once you are satisfied with the response at the cardiac silhouette record the data acquisition settings for future use, and repeat the above protocol for both the upper and lower load cells. The impact locations for the upper and lower load cells can be found using the dimensions listed on Figure 1.

NOTE: If your laboratory will be testing with both baseball and lacrosse balls, your lab must validate the NTS with both projectiles to obtain settings for each projectile.

If you have any questions as to how to perform this procedure, contact Southern Impact Research Center at info@soimpact.com.

PROPOSED

FEBRUARY 2017 MODIFICATIONS/REVISIONS

- Changed 18" to 24" in Section 10.1 to match the requirements in ND 021
- Changed referenced (ball characteristics) section from 12 to 13 in Section 11.2.
- Added "ALL" to example warning in section 15.3
- Added reference to ND 021 Figures 1 and 2 in section 10.2 and removed those figures from this document

JUNE 2017 MODIFICATIONS/REVISIONS

- REVISION: Reduced equipment level from 3 to 2 in Section 1.1.
- REVISION: Increased pass/fail criteria from 90 lb-f to 112 lb-f in Section 14.1.2.
- REVISION: Increased pass/fail criteria from 180 lb-f to 225 lb-f in Section 14.2.2.
- REVISION: Included a system check for the upper and lower load cells and added an upper range to the allowable load cell response (150 lb-f) in Section 11.2.
- Added a second figure depicting upper and lower load cell placement.
- Removed language requiring 200 ms data capture and time at which data capture begins.
- Added reference to Figure 2 in Section 12.2.
- Added Appendix 1
- Changed the word below to above in Step 6 of Appendix 1.

FEBRUARY 2018 MODIFICATIONS/REVISIONS

- REVISION: Removed COR requirement for baseball projectile Section 13.1.1

JULY 2019 MODIFICATIONS/REVISIONS

- REVISION: Added requirement to place logo on the primary protective component.
- Added a definition of Primary Protective Component.
- Changed "chest protector" to "protector".

PROPOSED